AURORA COLLECTION

SPECIFICATIONS MODEL LS18304

GENERAL
Fine quality sink formed of heavy duty 18 gauge, type 304 nickel bearing stainless steel.

DESIGN FEATURES
Bowl depth 9” with inside bowl dimensions 21-3/8” X15-3/4” and over all 23-3/8” X 17-3/4”
Finish: Inside bowl surfaces polished to a uniform satin finish.
Underside: High density sound absorption pads covered with a thick rubberized insulation layer on all bottom surfaces.

Other: Drain opening 3 ½”.

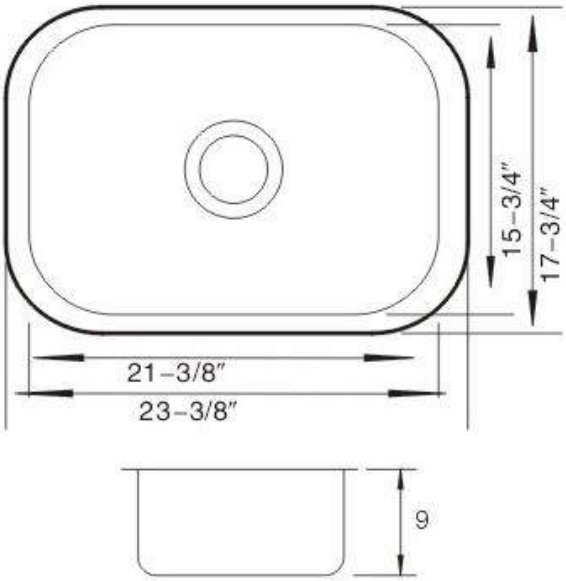

CUPC certified
Minimum cabinet size 24”
Product shall be specified as LS18304

OPTIONAL ACCESSORIES:
Sink Drain: A-SS-01, A-SS-02
Stainless Steel Grids: G304

CONCETTO
Single-lever sink mixer 1/2"
MODEL # 32665

Pure Freude an Wasser

GROHE

GROHE America, Inc | 200 North Gary Avenue, Suite G, Roselle, IL 60172
Phone: +1 (800) 444-7643 | Fax: +1 (800) 225-2778 | us-customerservice@grohe.com

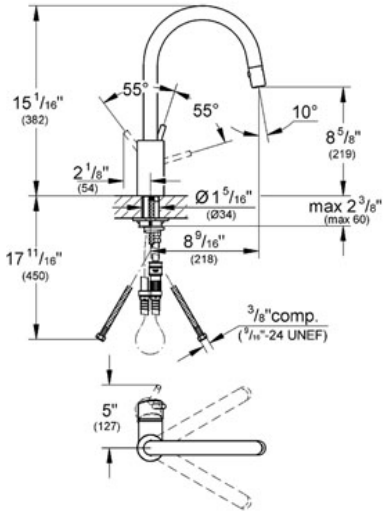

ADA

Product Description:
Single-lever sink mixer 1/2"

Standard Specification:
- **GROHE StarLight®** finish
- **GROHE SilkMove®** ceramic cartridge
- Single hole installation
- Swivel Spout
- Extractable integrated trigger spray
- Integrated non-return valve
- Stainless Steel Braided Flexible Supplies
- Quick installation system
- **Protected against backflow**
- Max Flow Rate 1.75 gpm (6.6 L/min)
- Variable Handle Positioning

Applicable Codes & Standards:
- Energy Policy Act of 1992
- NSF 61
- ASME A112.18.1/CSA B125.1
- US Federal and State material regulations
- ICC/ANSI A117.1
- CalGreen

Color:
- ❑ 32665 001 chrome
- ❑ 32665 DC1 supersteel